9-0 MICROFILMED
PROJ# 742-92 OCT 19 1995

STATE OF OHIO
DEPARTMENT OF TRANSPORTATION
CUY-90-(14.52) (17.04) (17.14) (17.28) (17.49) (17.68) & (17.86)
CITY OF CLEVELAND
CUYAHOGA COUNTY

IR-90-1 (163) 27

CUYAHOGA COUNTY CUY-90-(14,52)(17,04) (17,28)(17.49)(17.68) & (17.86)	OHIO FHWA REGION 5
IR-90-1 (163) 27	FEDERAL PROJECT

1/95

NOTE: CUY-90-14.52/17.86 APPEARING THROUGHOUT THESE PLANS SHALL BE CONSIDERED TO READ AS SHOWN ABOVE.

DESIGN DESIGNATION

SEE SHEET 2 OF 95 FOR DESIGN DESIGNATION INFORMATION ON THESE STRUCTURES.

CONVENTIONAL SIGNS

WATER LINE (EXISTING) —W— (PROPOSED) —W—
CORPORATION LINE
FENCE LINE (EXISTING) —x—x—x— (PROPOSED) —x—x—x—
CENTER LINE
UTILITY POLES TELEPHONE ⌀ POWER ⌀ LIGHT ⌀
GAS LINE —G— —G—
TREES STUMPS (TO BE REMOVED)
RIGHT OF WAY R/W
CATCH BASIN (EXISTING) (PROPOSED)
PROPERTY LINE (IN EXISTING FENCE) —x—x—x—
GUARD RAIL (EXISTING) (PROPOSED)
WORK LIMITS

INDEX OF SHEETS

DRAWING LIST

TITLE SHEET	1
SCHEMATIC PLAN AND DESIGN DESIGNATIONS	2
TYPICAL SECTIONS	3 THRU 6
GENERAL NOTES	7, 7A
CALCULATIONS	8
SUBSUMMARIES	9
GENERAL SUMMARY	10 AND 11, 11A
APPROACH SLAB DETAILS	12 AND 13
DRAINAGE PLAN	14
SLOPE PROTECTION PLANS	15
PAVEMENT MARKING PLANS & SIGNING PLANS	16 THRU 18, 18A, 18B
MAINTENANCE OF TRAFFIC PLANS	21 THRU 30, 30A, 30B
STRUCTURE PLANS OVER 20'	31 THRU 95
SHEET NUMBER 19 AND 20 NOT USED	

LINE DATA

PROJECT LIMITS = 0.00 L.F. OR 0.000 MILE

STRUCTURE NO.	FEATURE		WORK LENGTH
CUY-90-14.52	SCRANTON RD.	BEGIN WORK STA. 16+40 END WORK STA. 23+50	710 L.F.
CUY-90-17.04	PROSPECT AVE.	BEGIN WORK STA. 12+50 END WORK STA. 28+50	1,600 L.F.
CUY-90-17.14	EUCLID AVE.	BEGIN WORK STA. 13+25 END WORK STA. 20+50	725 L.F.
CUY-90-17.28	CHESTER AVE.	BEGIN WORK STA. 10+30 END WORK STA. 23+00	1,270 L.F.
CUY-90-17.49	PAYNE AVE.	BEGIN WORK STA. 10+50 END WORK STA. 22+20	1,170 L.F
CUY-90-17.68	SUPERIOR AVE.	BEGIN WORK STA. 4+00 END WORK STA. 19+70	1570 L.F.
CUY-90-17.86	ST. CLAIR AVE.	BEGIN WORK STA. 11+00 END WORK STA. 19+20	820 L.F.

TOTAL WORK LIMITS = 7865 L.F. OR 1.490 MILES

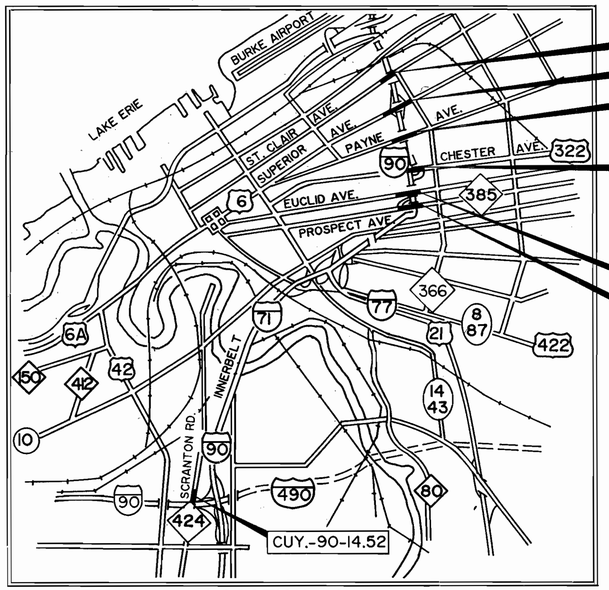

LOCATION MAP

SCALE IN MILES 0 2 3

PORTION TO BE IMPROVED
STATE AND FEDERAL ROUTES
OTHER ROADS

SCALES

PLAN 0 10 20 40
PROFILE-HORIZONTAL 0 10 20 40 VERT. 0 5 10
CROSS SECTION-HORIZONTAL 0 5 10 VERT. 0 5 10

UNDERGROUND UTILITIES

2 WORKING DAYS
BEFORE YOU DIG
CALL 800-362-2764 (TOLL FREE)
OHIO UTILITIES PROTECTION SERVICE
NON-MEMBER MUST BE CALLED DIRECTLY

SUPPLEMENTAL SPECIFICATIONS

NUMBER	DATE	NUMBER	DATE
814	1-21-88	933	2-10-87
836	11-12-85	802	4-13-90
845	5-31-88	902	8-31-79
850	5-31-88	921	12-4-72
852	6-10-87	923	1-10-69
942	3-18-92		
944	3-18-92		
952	12-14-88		
953	8- -80		

1991 SPECIFICATIONS

THE STANDARD SPECIFICATIONS OF THE STATE OF OHIO, DEPARTMENT OF TRANSPORTATION, INCLUDING CHANGES AND SUPPLEMENTAL SPECIFICATIONS LISTED IN THE PROPOSAL SHALL GOVERN THIS IMPROVEMENT.

I HEREBY APPROVE THESE PLANS AND DECLARE THAT THE MAKING OF THIS IMPROVEMENT WILL NOT REQUIRE THE CLOSING OF THE HIGHWAY TO TRAFFIC AND THAT THE PROVISIONS FOR THE MAINTENANCE AND SAFETY OF TRAFFIC WILL BE AS SET FORTH ON THESE PLANS AND ESTIMATES.

LIMITED ACCESS

THIS IMPROVEMENT IS ESPECIALLY DESIGNED FOR THROUGH TRAFFIC AND HAS BEEN DECLARED A LIMITED ACCESS HIGHWAY OR FREEWAY BY ACTION OF THE DIRECTOR IN ACCORDANCE WITH THE PROVISIONS OF SECTION 5511.02 OF THE REVISED CODE OF OHIO.

APPROVED Bryan J. Hoskin
DATE 1/3/92 DISTRICT DEPUTY DIRECTOR OF TRANSPORTATION

APPROVED B.D. Hamblen
DATE 4-24-92 ENGINEER, BUREAU OF BRIDGES AND STRUCTURAL DESIGN

APPROVED James L. Butz
DATE 5/18/92 DEPUTY DIRECTOR PLANNING AND DESIGN

APPROVED James L. Wray
DATE 5-18-92 DIRECTOR, DEPARTMENT OF TRANSPORTATION

SUPPLEMENTAL PRINTS OF STANDARD CONSTRUCTION DRAWINGS

NUMBER	DATE	NUMBER	DATE	NUMBER	DATE	NUMBER	DATE
BP-2	1-11-85	GR-1.1	5-6-91	EXJ-4-87	1-5-89	TC-35.10	8-29-84
BP-3	12-6-76	GR-1.2	5-6-91	SD-1-69	6-12-69	TC-42.20	3-26-79
BP-4	10-1-87	GR-2.1	5-6-91			TC-51.10	1-20-84
BP-5	10-1-87	GR-3.1	5-6-91	AS-1-81	11-27-81	TC-51.11	1-20-84
BP-7	10-1-87	GR-3.2	5-6-91	MT-99.10	11-14-86	TC-18.24	4-25-79
BP-11	1-30-84			MT-95.31	10-10-88	TC-18.26	5-31-79
		MC-4	7-26-76	MT-95.32	8-25-89	TC-22.10	3-1-79
CB-3A	5-1-79	MC-11	8-1-78			TC-22.20	3-1-79
		MC-9.2	5-6-91	TC-41.10	8-29-84	TC-31.21	3-6-79
F-1	11-10-83			TC-41.20	3-26-79	TC-32.10	3-8-79
F-3	5-1-76			TC-52.10	4-3-79	TC-32.11	3-21-79
				TC-52.20	4-3-79		

REVISED 7-9-92

DEPARTMENT OF TRANSPORTATION
FEDERAL HIGHWAY ADMINISTRATION

APPROVED

DIVISION ADMINISTRATOR DATE

PLANS PREPARED BY
OSBORN ENGINEERING COMPANY
CLEVELAND, OHIO 44114

STATE OF OHIO KURT K RIM 34505 REGISTERED PROFESSIONAL ENGINEER
SEAL

05585

PROJECT: CUY-90-14.52 / 17.86
DATE OF LETTING ____ 19__, CONTRACT NO. ____

SCHEMATIC PLAN

CALC. J.A. BY		OHIO	2
DATE 7/97		FHWA 5 REGION	95
CHK'D D.S. BY			
DATE 7/97			

CUY.-90-14.52/17.86

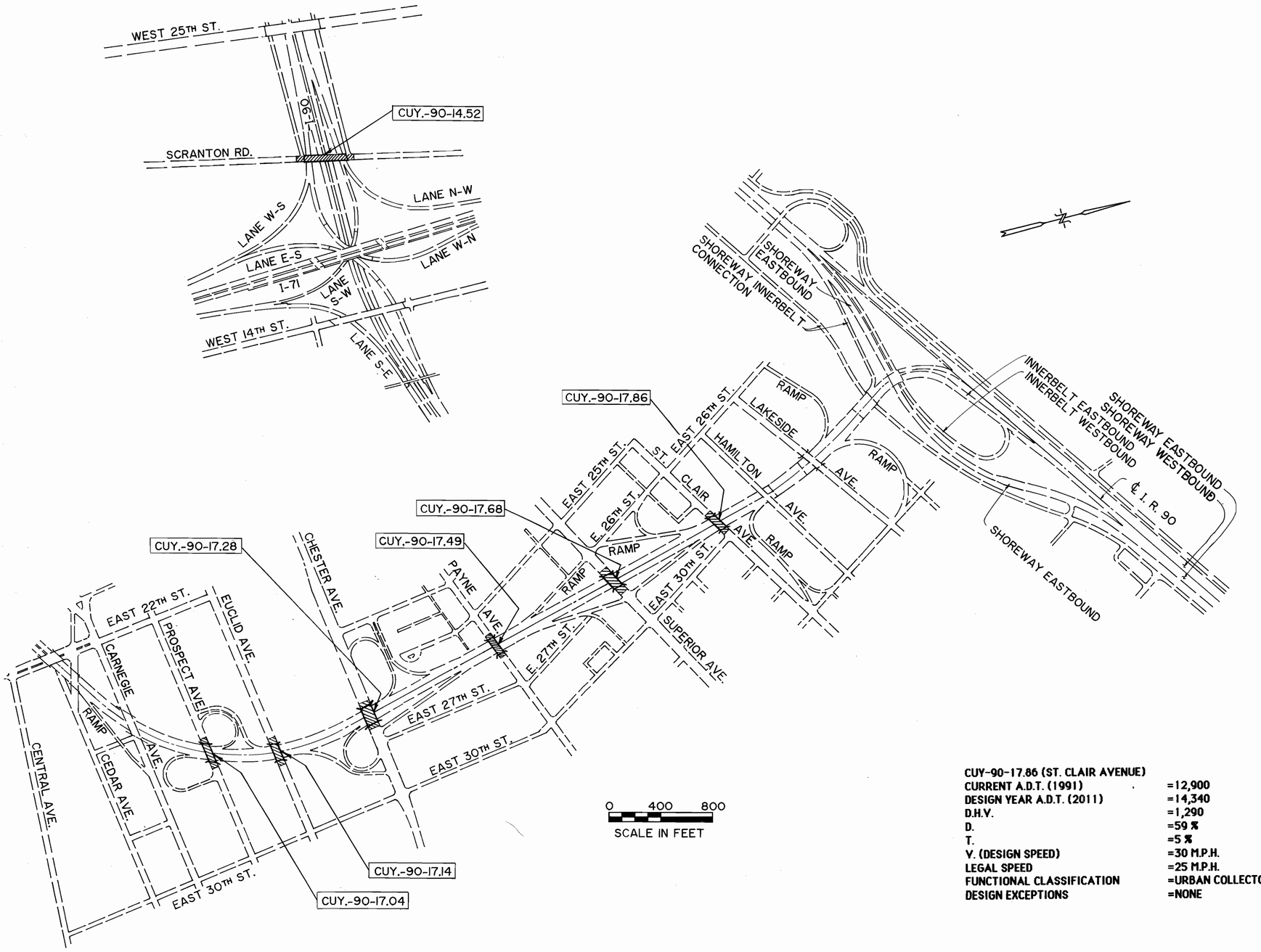

DESIGN DESIGNATION FOR SEVEN BRIDGES LISTED BELOW

CUY-90-14.52 (SCRANTON ROAD)

CURRENT A.D.T. (1991)	=6,435
DESIGN YEAR A.D.T. (2011)	=7,150
D.H.V.	=715
D.	=55 %
T.	=2 %
V. (DESIGN SPEED)	=30 M.P.H.
LEGAL SPEED	=25 M.P.H.
FUNCTIONAL CLASSIFICATION	=URBAN COLLECTOR
DESIGN EXCEPTIONS	=NONE

CUY-90-17.04 (PROSPECT AVENUE)

CURRENT A.D.T. (1991)	=19,560
DESIGN YEAR A.D.T. (2011)	=21,740
D.H.V.	=2,391
D.	=56 %
T.	=3 %
V. (DESIGN SPEED)	=30 M.P.H.
LEGAL SPEED	=25 M.P.H.
FUNCTIONAL CLASSIFICATION	=URBAN ARTERIAL
DESIGN EXCEPTIONS	=NONE

CUY-90-17.14 (EUCLID AVENUE)

CURRENT A.D.T. (1991)	=13,200
DESIGN YEAR A.D.T. (2011)	=14,690
D.H.V.	=1,175
D.	=58 %
T.	=3 %
V. (DESIGN SPEED)	=30 M.P.H.
LEGAL SPEED	=25 M.P.H.
FUNCTIONAL CLASSIFICATION	=URBAN ARTERIAL
DESIGN EXCEPTIONS	=NONE

CUY-90-17.28 (CHESTER AVENUE)

CURRENT A.D.T. (1991)	=35,500
DESIGN YEAR A.D.T. (2011)	=39,460
D.H.V.	=4,735
D.	=55 %
T.	=2 %
V. (DESIGN SPEED)	=30 M.P.H.
LEGAL SPEED	=25 M.P.H.
FUNCTIONAL CLASSIFICATION	=URBAN ARTERIAL
DESIGN EXCEPTIONS	=NONE

CUY-90-17.49 (PAYNE AVENUE)

CURRENT A.D.T. (1991)	=4,800
DESIGN YEAR A.D.T. (2011)	=5,340
D.H.V.	=534
D.	=55 %
T.	=3 %
V. (DESIGN SPEED)	=30 M.P.H.
LEGAL SPEED	=25 M.P.H.
FUNCTIONAL CLASSIFICATION	=URBAN COLLECTOR
DESIGN EXCEPTIONS	=NONE

CUY-90-17.86 (ST. CLAIR AVENUE)

CURRENT A.D.T. (1991)	=12,900
DESIGN YEAR A.D.T. (2011)	=14,340
D.H.V.	=1,290
D.	=59 %
T.	=5 %
V. (DESIGN SPEED)	=30 M.P.H.
LEGAL SPEED	=25 M.P.H.
FUNCTIONAL CLASSIFICATION	=URBAN COLLECTOR
DESIGN EXCEPTIONS	=NONE

CUY-90-17.68 (SUPERIOR AVENUE)

CURRENT A.D.T. (1991)	=25,100
DESIGN YEAR A.D.T. (2011)	=27,840
D.H.V.	=2,227
D.	=54 %
T.	=5 %
V. (DESIGN SPEED)	=30 M.P.H.
LEGAL SPEED	=25 M.P.H.
FUNCTIONAL CLASSIFICATION	=URBAN ARTERIAL
DESIGN EXCEPTIONS	=NONE

CUY.-90-14.52/17.86

LT. POLE, 47.00', HUB SET, CHESTER AVE., W.V., 25.78', 32.88', TOP NUT HYD.	M.H., 34.49', 68.48', BOLT IN LT. POLE BASE, 74.40', HUB SET, LT. POLE
STA. 15+00	STA. 19+00
PUNCH IN STEEL POLE OR W.V.	PUNCH IN STEEL POLE OR M.H.

BENCH MARK = TOP OF N.E. ANCHOR BOLT OF SOHIO SIGN N.E. CORNER I-90 & CHESTER AVE. EL. 655.63

NOTE: ALL EXISTING UTILITY LINES ON BRIDGE ARE TO REMAIN IN PLACE.

OHIO | FHWA 5 REGION | 54/95

CUY-90-14.52/17.86

TRAFFIC DATA
2010 ADT = 39,460
2010 ADTT = 395
DESIGN SPEED = 30 M.P.H.

EXISTING STRUCTURE (SFN: 1807986)

TYPE : 2 SPAN REINFORCED CONCRETE DECK ON CONTINUOUS STEEL BEAMS. PIERS ARE REINFORCED CONCRETE CAP BEAMS ON 12" Ø C.I.P. CONCRETE PILES. ABUTMENTS ARE FULL HEIGHT REINFORCED CONCRETE ABUTMENTS ON 12" Ø C.I.P. CONCRETE PILES.
WEARING COURSE: 2 1/2"± ASPHALT CONCRETE
SPAN: 67.50' AND 67.50' CL/CL BEARINGS
ROADWAY WIDTH: TWO 35'-0" F / F CURB WITH 18.00' CONCRETE MEDIAN AND 8.25' SIDEWALK EACH SIDE
SKEW ANGLE: 5°-39' RIGHT FORWARD — ALIGNMENT: TANGENT
CROWN: 3/16" PER FOOT — LOADING: CF2000 (51)
APPROACH SLABS: 25'-0" (AS-1-54) — YEAR BUILT: 1957

PLAN

NEW CONCRETE DECK WITH SIDEWALKS, MEDIAN, CONCRETE PARAPETS AND TOP PARAPET VERTICAL FENCE

REPLACE CONCRETE PARAPET WITH TALLER CONCRETE PARAPET AND TOP PARAPET VERTICAL FENCE (TYPICAL FOUR WINGWALLS)

BEGIN WORK STA. 10+30

BEGIN PROJECT STA. 16+12.04

END PROJECT STA. 17+79.90

END WORK STA. 23+00

5° 39'± SKEW
INSTALL SEALED EXPANSION JOINTS (BOTH ABUTMENTS)

BEGIN FEATHERING STA. 16+00

END APPROACH SLAB STA. 16+26.04

BEGIN APPROACH SLAB STA. 17+65.90

BEGIN FEATHERING STA. 15+25

END FEATHERING STA. 18+10

STA. 16+95.97

CURB REPLACEMENT

APPROACH SLAB REPLACEMENT (TYPICAL)

SHALLOW PIPE UNDERDRAIN, TYP.

PRESSURE RELIEF JOINT TYPE C

5' CHAIN LINK FENCE

6' CONC. WALK

7.5' CONC. WALK

5' C.L.F.

GUARDRAIL

SIDEWALK & CURB REPLACEMENT

EXIST. 8" GAS

EXIST. 16" W.M.

EXIST. C.E.I. DUCTS

SIGN POLE

PARKING METER

RAMP

E. 27 TH.

CHESTER AVE.

INTERSTATE 90 SOUTHBOUND

INTERSTATE 90 NORTHBOUND

NOTE:

SEE SHEET 13 OF 95 FOR FENCE DETAILS. SEE SHEETS 8 AND 9 OF 95 FOR ROADWAY QUANTITIES AND SEE SHEET 4 OF 95 FOR TYPICAL ROADWAY SECTIONS AT THE CUY-90-17.28 BRIDGES (CHESTER AVE).

PROPOSED WORK

1. REPLACE CONCRETE DECK, INCLUDING SIDEWALKS, MEDIAN, CONCRETE PARAPETS AND TOP PARAPET VERTICAL FENCE.
2. INSTALL ELASTOMERIC STRIP SEAL TRANSVERSE AND LONGITUDINAL EXPANSION JOINTS.
3. RESET BEARING DEVICES.
4. REPLACE ABUTMENT BACKWALLS.
5. REPLACE WINGWALL CONCRETE PARAPETS WITH TALLER CONCRETE PARAPET AND TOP PARAPET VERTICAL FENCE.
6. SEAL EXPOSED CONCRETE SURFACES WITH EPOXY.
7. REPLACE PORTIONS OF APPROACH SLABS, APPROACH SIDEWALKS AND CURBS.
8. INSTALL PRESSURE RELIEF JOINTS.
9. PATCH PIERS.

THE PROPOSED WORK SHALL BE CONSTRUCTED WITH VEHICULAR AND PEDESTRIAN TRAFFIC MAINTAINED.

ELEVATION

BUTT JOINT TYPE PER BP-5 — BUTT JOINT TYPE PER BP-5

25'± EASTBOUND FEATHERING — WESTBOUND FEATHERING 12'± — BRIDGE LIMITS = 139.86' — 30'± FEATHERING

REPLACE BACKWALL AND SEAL EXPOSED SURFACES (TYPICAL)

RESET SLIDING PLATE BEARING DEVICES (TYPICAL BOTH ABUTMENTS)

SEAL EXPOSED SURFACES

EXIST. SUBSTRUCTURES TO REMAIN

REPLACE PORTION OF APPROACH SLAB (TYPICAL)

+0.16% GR.

	14	15	(EB)	(EB)	(EB)	16 (EB)	STA. 16+26.04			17				STA. 17+65.90	18		
PROPOSED PROFILE ELEVS. ALONG MEDIAN GUTTERS			654.59	654.64	654.68	654.68 654.72		654.76	654.80		654.84	654.88	654.92	654.96	654.99	655.04	655.05
EXISTING PROFILE ELEVS. ALONG MEDIAN GUTTERS (WESTBOUND) (EASTBOUND)	654.30 654.39	654.33 654.46	654.37 654.56	654.42 654.59	654.50 654.54	654.61 654.54	654.68 654.55	654.84 654.72	654.87 654.75	654.82 654.80		654.82 654.79	654.93 654.85	655.02 654.98	655.02 655.13	655.07 654.97	655.05 655.07	655.06 655.12

THE OSBORN ENGINEERING COMPANY 24/65
CONSULTING ENGINEERS
CLEVELAND, OHIO 44114

GENERAL PLAN AND ELEVATION

CHESTER AVENUE BRIDGE NO. CUY-90-1728 .

DESIGNED	DRAWN	TRACED	CHECKED	REVIEWED	DATE	REVISED ODOT D12 BGW 1/25/92
JRS	BFG	—	RCK	R.S.	3/12/91	

CALC. BY DATE		OHIO
CHKD. BY DATE		FHWA REGION 5

61/95

CUY-90-14.52/17.86

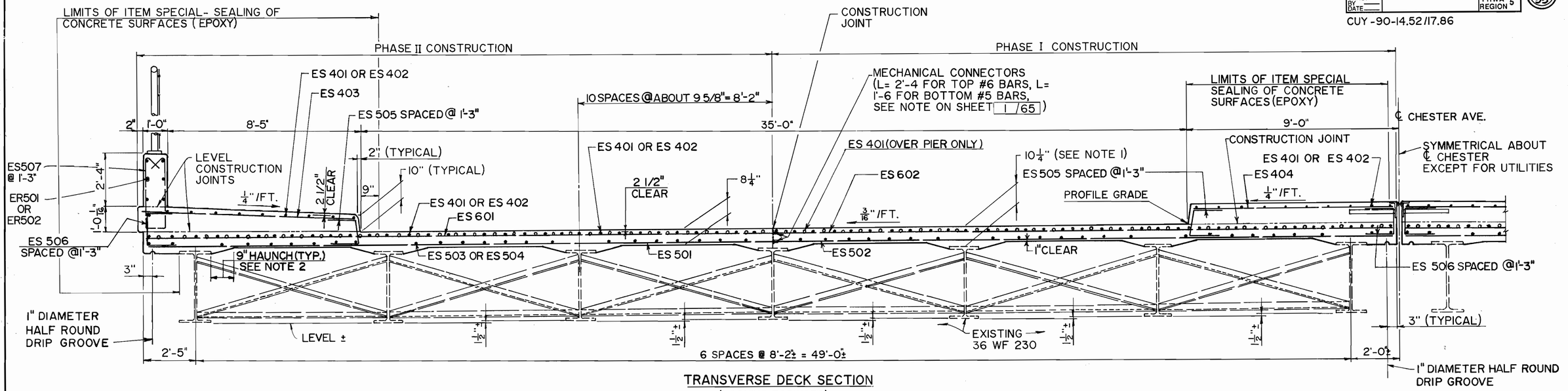

TRANSVERSE DECK SECTION

(LOOKING FORWARD)

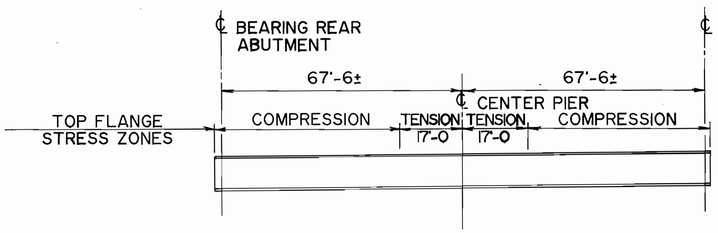

TYPICAL BEAM ELEVATION

(SEE NOTE NO. 6)

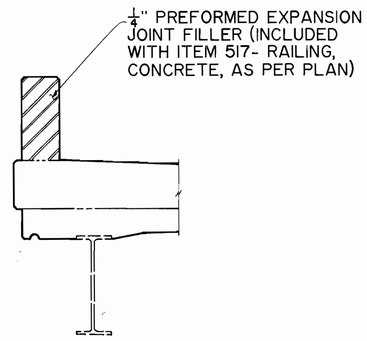

SECTION THRU DEFLECTION JOINT

(SEE DECK SLAB PLAN FOR JOINT SPACING)

NOTES:

1. DECK SLAB DEPTH: THE DISTANCE SHOWN FROM TOP OF DECK SLAB TO TOP OF STEEL BEAM IS THE DESIGN DIMENSION. THE QUANTITY OF DECK CONCRETE TO BE PAID FOR SHALL BE BASED ON THIS DIMENSION, EVEN THOUGH DEVIATION FROM IT MAY BE NECESSARY BECAUSE THE TOP FLANGE OF THE BEAM MAY NOT HAVE THE EXACT CAMBER OR CONFORMATION REQUIRED TO PLACE IT PARALLEL TO THE FINISHED GRADE.
2. A HAUNCH WIDTH OF 9" SHALL BE USED FOR COMPUTING QUANTITY OF CONCRETE. HOWEVER THE HAUNCH WIDTH MAY VARY BETWEEN 6" AND 12", PROVIDED THAT THE SLOPE SHALL NOT BE MORE THAN 1:4 FOR A HAUNCH LESS THAN 9" IN WIDTH.
3. FOR REINFORCEMENT SCHEDULE, SEE SHEET 25/65.
4. FOR DETAILS OF TOP PARAPET VERTICAL FENCE SEE SHEET 65/65.
5. FOR EXPANSION JOINT DETAILS SEE SHEETS 32/65 AND 61/65.
6. WELDED ATTACHMENT OF SUPPORTS FOR CONCRETE DECK FINISHING MACHINE MAY BE MADE TO AREAS OF THE FASCIA STRINGER FLANGES DESIGNATED "COMPRESSION". ATTACHMENTS SHALL NOT BE MADE TO AREAS DESIGNATED "TENSION". FILLET WELDS TO COMPRESSION FLANGES SHALL BE NOT CLOSER THAN 1" FROM EDGE OF FLANGE, BE NOT MORE THAN 2" LONG, AND BE NOT SMALLER THAN THE MINIMUM SIZE REQUIRED BY AASHTO.

THE OSBORN ENGINEERING COMPANY
CONSULTING ENGINEERS
CLEVELAND, OHIO 44114

31/65

TRANSVERSE DECK SECTION

CHESTER AVE.
BRIDGE NO. CUY-90-1728

DESIGNED	DRAWN	TRACED	CHECKED	REVIEWED	DATE	REVISED
JRS	BFG	—	JRS	R.S.	3/12/91	